Series 33, 34

Features

- Snap fits into 1.280 x .375 panel cutout
- Incandescent and neon illumination
- Many lens styles available
- Dummy (hole plugs) available

Specifications

- Body Material: Nylon
- Lens Material Polycarbonate
- Wire Gauge: 18 ga.
- Wire strip 1/2"
- Panel Thickness: .030 to .100
- Certifications: Contact Us

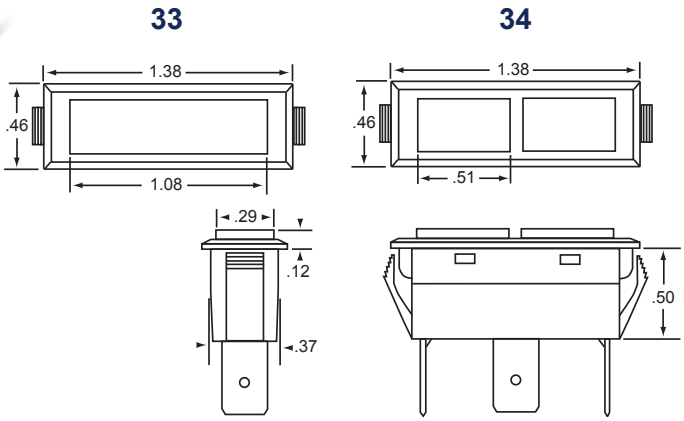

Series	Lamp			Termination		Base		Bezel		Lens			
XX	XX		–	X	–	X		X	–	XXX		X	X

Voltage	Type	Code
33 N/A	DUMMY	00
34 6	INCAND	32
14	**INCAND**	**35**
28	**INCAND**	**39**
125	NEON	50
250	NEON	52
2	ViviBright LED	60
6	ViviBright LED	61
14	ViviBright LED	62
28	ViviBright LED	63
125	ViviBright LED	65 [1]
250	ViviBright LED	66 [1]
	Custom	XX

Style	Code
N/A	0
6" Wire	1
.187 Tabs	3
.250 Tabs	4
Special	X

Color	Code
Matte White	4
Matte Black	**5**

Finish	Code
None	0
Stainless	1

Style	Code
33 Series Lenses	
Rectangular Translucent	181
Rectangular Plain	182
Rectangular Diamond	**183**
Rectangular Frost	184
Rectangular Lines	185
34 Series Lenses	
Rectangular Translucent	191
Rectangular Diamond	**193**
Rectangular Frost	194
Rectangular Lines	195

Color	Plain
Red	1
Amber	2
Clear	3
Green	4
Blue	5
White	6
Black	7

Color	Marked
Red	A
Amber	B
Clear	C
Green	D
Blue	E
White	F

Series	Code
33	0
34	Select 2nd lens color

Panel Cutout

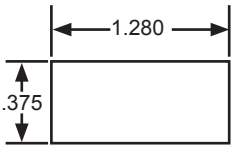

White is Translucent
Clear is Transparent

Additional Options Available:
Contact sales@solico.com

1. Wire leads only